Baumer
Passion for Sensors

D825

Flanged diaphragm seal with specific materials

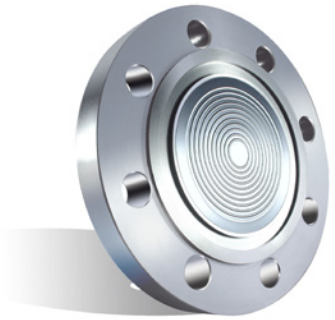

BOURDON
The Original by Baumer

Main Features

- Pressure range from 160 mbar to 400 bar
- Wetted parts in specific materials
- Temperature -40°C ….400°C
- Class 150 to 2500
- NPS 2" to 3"
- PN10 to PN100
- DN50 to DN80

Applications

- Oil & Gas / Chemical
- Water / Waste water
- Energy
- Process technic

Technical Data

This diaphragm seals with flanged process connection and specific materials are used to protect pressure gauges from high temperatures, aggressive or corrosive fluids.

The diaphragm seals allows direct mounting on standardized flange connections of pipes or tanks. With the flush diaphragm these seals are used especially for fluids with high viscosity or a tendency to crystallize.

A wide range of material allows the user to adapt the diaphragm seal to many different type of application and process fluids.

Both diaphragm and body (wetted parts) are made completely from the specific material and welded together. A stainless steel counter flange, which is not in contact with the medium, is used to fix the diaphragm seal on the installation.

The filling fluid of the measuring system has to be choosen compatible to the application.

Min.pressure ranges	See table on page 2
Temperature	-40 °C ... +400 °C
Filling liquids	LRS1 : -15°C ... +150°C LRS9 : -40 °C ... +400 °C high temperature oil Other liquids on request
Mounting	Direct or remote from 1.5 to 12 meters
Flange types	**ASME B16.5 / EN1759-1 :** class 150 to 2500, NPS 2" to 3". **EN1092-1 :** PN 10 to 100, DN 50 to 80. Available flange faces see table on page 3. Other flange types on request.
Diaphragm and body (wetted parts)	Uranus B6, Hastelloy B2, Hastelloy C276, Hastelloy C4, Monel 400, Titanium
Counter flange	Stainless steel 1.4404 (AISI 316L)
Maximum pressure	According to the PN or the class of the flange and its standardized pressure temperature relation

Materials

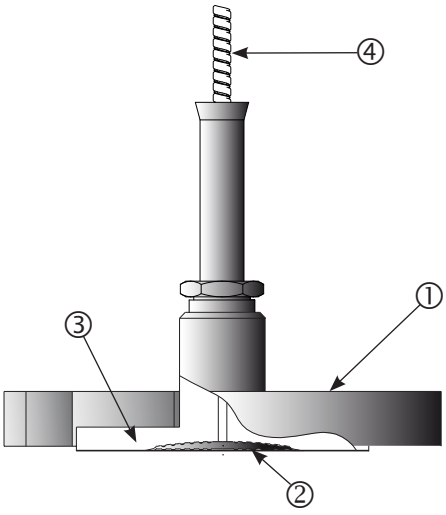

	N°	D825
Counter flange	①	• Stainless steel 1.4404
Diaphragm and Body (wetted parts)	② ③	• Uranus B6 (1.4539) • Hastelloy B2 (2.4617) • Hastelloy C276 (2.4819) • Hastelloy C4 (2.4610) • Monel 400 (2.4360) • Titanium
Capillary (option)	④	• Stainless steel

Design and specifications subject to change without notice
2015-05-05

D825

Flanged diaphragm seal with specific materials

Dimensions (mm)

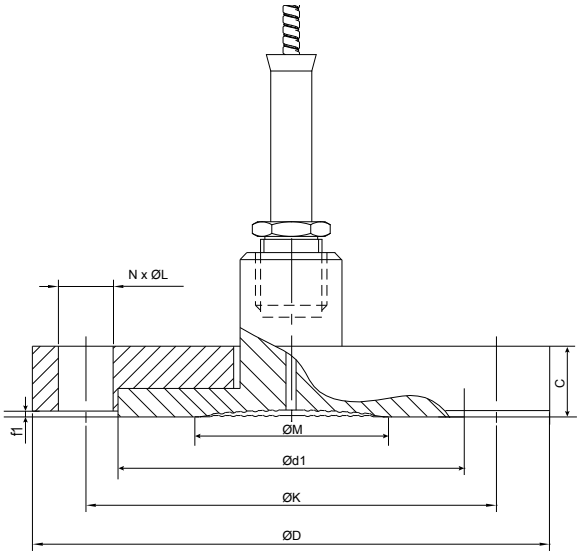

Minimum pressure ranges depending on the active diaphragm diameter Ø M [1]

Ø M [2] (mm)	DN63		DN100/150/160	
	Gauge	Compound	Gauge	Compound
54	0 ... 1 bar	-1 ... 3 bar	0 ... 1 bar	-1 ... 3 bar
89	0 ... 1 bar	-1 ... 0 bar	0 ... 0.16 bar	-1 ... 0 bar

[1] Fluid temperature -20 ... 100°C, ambiant temperature -10 ... 50°C, others on request
[2] Ø M according to dimension tables below.

Flange dimensions (mm) ANSI B16-5 / EN 1759-1

DN	Class	Ø D	C	Ø K	Ø L	N	f1	Ø d1	Ø M in mm	Weight (kg)
2"	150	152	19	120.6	19	4	1.6	91.9	54	2.4
	300	165	22.2	127	19	8	1.6	91.9	54	3.2
	600	165	31.8	127	19	8	6.4	91.9	54	4.2
	900/1500	216	44.5	165.1	25.4	8	6.4	91.9	54	10.1
	2500	235	50.8	171.5	28.5	8	6.4	91.9	54	15.6
2" 1/2	150	178	22.2	139.7	19	4	2	104.6	54	4
	300	190	25.4	149.2	22.2	8	2	104.6	54	4.9
	600	190	35	149.2	22.2	8	2	104.6	54	6.1
	900/1500	244	47.7	190.5	28.6	8	2	104.6	54	14
3"	150	190	23.8	152.4	19	4	1.6	127	89	5
	300	210	28.6	168.3	22.2	8	1.6	127	89	6.9
	600	210	38.2	168.3	22.2	8	6.4	127	89	8.5
	900	241	44.5	190.5	25.4	8	6.4	127	89	13.1

Flange dimensions (mm) EN 1092-1

DN	PN	Ø D	C	Ø K	Ø L	N	f1	Ø d1	Ø M in mm	Weight (kg)
50	10/16	165	20	125	18	4	3	102	54	2.9
	25/40	180	26	135	22	4	3	102	54	3.2
	63	195	28	145	26	4	3	102	54	4.6
	100	195	30	145	26	4	3	102	54	5.7
65	10/16	185	18	145	18	8	3	122	54	3.5
	25/40	185	22	145	18	8	3	122	54	4.3
	63	205	26	160	22	8	3	122	54	5.7
	100	220	30	170	26	8	3	122	54	7.5
80	10/16	200	20	160	18	8	3	138	89	4.6
	25/40	200	24	160	18	8	3	138	89	5.6
	63	215	28	170	22	8	3	138	89	6.9
	100	230	32	180	26	8	3	138	89	8.9

Design and specifications subject to change without notice
2015-05-05

D825

Flanged diaphragm seal with specific materials

Ordering codes for flange faces

Face Type	Drawing	ANSI B16-5	Codes	EN 1759-1	Codes	EN 1092-1	Codes
Flat face	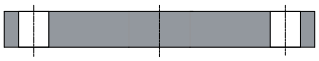	Flat face Ra = 3.2...6.3 µm	A	Type A Ra = 3.2...6.3 µm	A	Type A Ra = 3.2...6.3 µm	A
Raised face	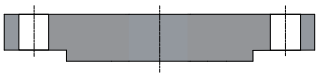	Raised face (1.6) [1] Raised face (6.4) [2] Ra = 3.2...6.3 µm	G R	Type B (1.6) [1] Type B (6.4) [2] Ra = 3.2...6.3 µm	G R	Type B1 Ra = 3.2...12.5 µm	B
Male tongue	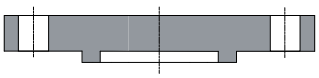	Male tongue large Male tongue small Ra = 0.8...3.2 µm	H I	Type CL Type CS Ra = 0.8...3.2 µm	H I	Type C Ra = 0.8...3.2 µm	C
Female groove	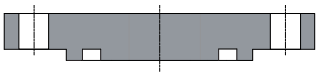	Female groove large Female groove small Ra = 0.8...3.2 µm	K L	Type DL Type DS Ra = 0.8...3.2 µm	K L	Type D Ra = 0.8...3.2 µm	D
Male Spigot	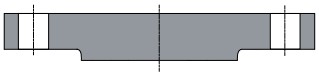	Male spigot large Male spigot small Ra = 3.2...6.3 µm	M N	Type E Ra = 3.2...6.3 µm	M	Type E Ra = 3.2...12.5 µm	E
Female Spigot	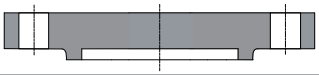	Female spigot large Female spigot small Ra = 3.2...6.3 µm	O P	Type FC Ra = 3.2...6.3 µm	O	Type F Ra = 3.2...12.5 µm	F
Ring joint face	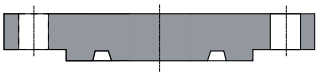	Ring joint face Ra = 0.4...1.6 µm	Q	Type J Ra = 0.4...1.6 µm	Q	N/A	

[1] Class 150 and 300
[2] Class 600, 900, 1500, 2500

Pre-selection guide for diaphragm seals with flange connection

Flange face	Codes	Stainless steel	Hastelloy B2	Hastelloy C276	Hastelloy C4	Tantalum	Monel 400	Uranus B6	Titanium
Flat face	A	D820	D820/D824	D820/D824	D820/D824	D824	D825	D820 D825	D825
Raised face	B, G, R	D820/D821		D820/D821/D824					
Male tongue	C, H, I	D820	D820 D825	D820 D825	D820 D825	n/a			
Female groove	D, K, L								
Male spigot	E, M, N								
Female spigot	F, O, P								
Ring joint face	Q								

Designation	Flush diaphragm	DN		Remark
		Min.	Max.	
D820	Yes	25	100	Only diaphragm in specific material, flange always stainless steel
D821	No	15	25	All wetted parts in specific materials
D824	Yes	50	100	All wetted parts in specific materials
D825	Yes	50	80	All wetted parts in specific materials

Design and specifications subject to change without notice
2015-05-05

D825

Flanged diaphragm seal with specific materials

Ordering details D825

D825	–				.		2			.			

Model

Flanged diaphragm seal with specific materials	D825

–

Mounting

Direct mounting	1
St. steel capillary with St. steel protection	A
St. steel capillary with St. steel protection and PVC sheath	B
St. steel capillary with reinforced St. steel protection	C
For special capillary Ø 2.5 mm (seals mounted on MX, MZ, RP, RD)	
St. steel capillary Ø 2.5 with St. steel protection	G
St. steel capillary Ø 2.5 with St. steel protection and PVC sheath	H
St. steel capillary Ø 2.5 with reinforced St. steel protection	J

Capillary length

Without (direct mounting)	0
1.5 m	E
3 m	3
4.5 m	F
6 m	6
9 m	9
12 m	D

Instrument connection

G1/2 female	L
G1/4 female	H
1/2 NPT female	N
1/4 NPT female	8
1/4 NPT male (only with capillary)	5
1/2 NPT male (only with capillary)	6

.

Flange standard

ANSI B16-5	2
EN 1092-1	4
EN 1759-1	6

Material counter flange

Stainless steel 1.4404 (316L)	2

PN

ANSI B16-5 / EN 1759-1	
Class 150	1
Class 300	2
Class 600	3
Class 900	4
Class 1500	5
Class 2500	6
EN 1092-1	
PN10	C
PN16	D
PN25	F
PN40	G
PN63	K
PN100	J

Diaphragm coating [1]

0	Without
1	PTFE 0.02 mm
4	HALAR 0.2 mm

Diaphragm material and flange face

3	Uranus B6 (1.4539)
5	Hastelloy B2 (2.4617)
6	Hastelloy C276 (2.4819)
A	Hastelloy C4 (2.4610)
8	Titanium
9	Monel 400

Flange face type

x	See table page 3 (codes)

.

DN

ANSI B16-5 / EN 1759-1	
7	2"
8	2"1/2
9	3"
EN 1092-1	
H	50
J	65
K	80

[1] No coating for flange facing types with groove, codes H, I, K, L, O, P, Q, C, D, F

Design and specifications subject to change without notice
2015-05-05